Hank Coffee Table

Assembly Instructions

A031-023-001

SERWALL
ONE DAY , MEET YOUR ADIRONDACK

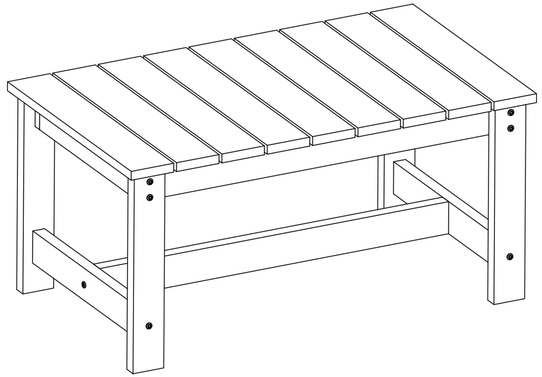

Important - Please read these instructions fully before starting assembly

HASSLE-FREE WARRANTY

Serwall stands behind the quality of our products.
For full warranty policy, email: **SERWALL@patioadirondack.com**

360 LBS CAPACITY | 1 PERSON ASSEMBLY | AROUND 25 MIN. ASSEMBLY

Safety & Care Advice

If you need help or have damaged or missing parts, please email: **SERWALL@patioadirondack.com**

Important - Please read these instructions fully before starting assembly

Check you have all the components and tools listed on the page 3.

Remove all fittings from the plastic bags and separate them into their groups.

Keep children and animals away from the work area, small parts may cause choking if swallowed.

Make sure you have enough space to layout the parts before starting.

Assemble on a soft level surface to avoid damaging the unit or your floor.

Do not stand or put weight on the product, this could cause damage.

Assemble the item as close to its final position (in the same area) as possible.

Do not place furniture directly in front of radiators, fires, or any other source of heat.

The assembly will be easier with 2 people while 1 person could also do the job.

General care & maintenance

Using damp cloth and mild detergent for routine maintenance, do not use bleach or abrasive cleaners.

From time to time check that there are no loose screws on this unit.

Clean & Sanitize Tips

Use this method for a quick clean-up here and there throughout the season — adding in the bleach solution to easily sanitize and eliminate any stubborn stains or dirt build-up from the winter months.

- Mix mild dish soap and warm water in a bucket.
- Use a clean cloth to wipe the soapy mixture onto the surfaces of your furniture, cleaning off any dirt.
- For extra cleaning power or to sanitize, mix 1/3 bleach and 2/3 water.
- Apply bleach mixture to furniture with a clean cloth and allow it to sit on the lumber for a few minutes (this will not affect the color).
- Loosen any dirt and debris that may catch in the surface grooves of the lumber by scrubbing the bleach mixture with a soft-bristle brush.
- Rinse thoroughly using a garden hose with a spray nozzle.

Components

If you need help or have damaged or missing parts, please email: **SERWALL@patioadirondack.com**

Please check you have all the components listed below.

Note: The illustration of the bench shows the exact position of each part. Check when assembling.

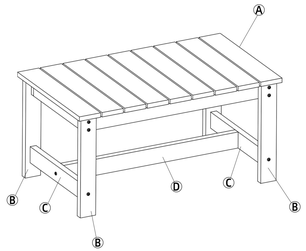

#		Description	Qty.
A		Desktop	1
B		Table Leg	4
C		Side Strecther	2
D		Strecther	1

Hardware & Tools

Note: The quantities below are the correct amount to complete the assembly. In some cases more fittings may be supplied than required.

① × 6

M6×60MM Screws

② × 8

M6×80MM Screws

③

Hex Key (Included)

Assembly Instructions

If you need help or have damaged or missing parts, please email: **SERWALL@patioadirondack.com**

⚠ Caution: Please do not over-tighten bolts and screws during assembly.

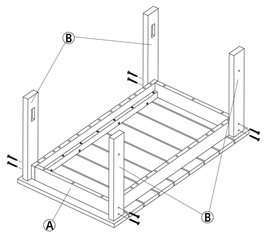

②×8

STEP1

●Attach "Foot Brace Back Rail (G)" to "Left Foot Brace (D)" and "Right Foot Brace (E)" - Using "②M6 x 60MM Screws" ,tighten with hex key.

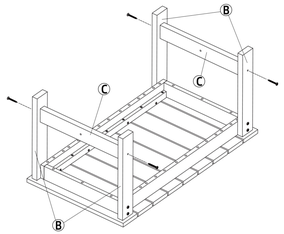

①×4

STEP2

●Attach "Left Armrest (B)" to "Plank of Armrest Frame (J/K/L)" to create the Left Armrest Frame- Using "③M6 x 80MM Screws", tighten with hex key.
Repeat the process to create the RightArmrest Frame.

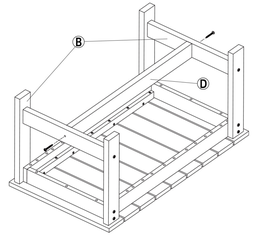

①×2

STEP3

●Attach "Seat Frame (A)" to "Left Armrest Frame" and "Right Armrest Frame" - Using "⑤M6 x 65MM Bolts" with "⑥ Washer" and "⑦Nut" , tighten with hex key and wrench.